OPI DATE 01/08/97 APPLN. ID 16888/97
AOJP DATE 25/09/97 PCT NUMBER PCT/US96/20734
AU9716888

(51) International Patent Classification 6 : E21B 47/022, G01V 3/12

A1

(11) International Publication Number: WO 97/25519

(43) International Publication Date: 17 July 1997 (17.07.97)

(21) International Application Number: PCT/US96/20734

(22) International Filing Date: 20 December 1996 (20.12.96)

(30) Priority Data:
08/587,832 11 January 1996 (11.01.96) US

(71) Applicant: VERMEER MANUFACTURING COMPANY [US/US]; 2411 Highway 102, Pella, IA 50219 (US).

(72) Inventors: STUMP, Gregory, S.; R.R. 2 Box 191, Oakland, IL 61943 (US). ALLEN, Christopher, T.; 16913 East 51st Court, Independence, MO 64055 (US).

(74) Agent: BRUESS, Steven, C.; Merchant, Gould, Smith, Edell, Welter & Schmidt, 3100 Norwest Center, 90 South Seventh Street, Minneapolis, MN 55402-4131 (US).

(81) Designated States: AL, AM, AT, AT (Utility model), AU, AZ, BA, BB, BG, BR, BY, CA, CH, CN, CU, CZ, CZ (Utility model), DE, DE (Utility model), DK, DK (Utility model), EE, EE (Utility model), ES, FI, FI (Utility model), GB, GE, HU, IL, IS, JP, KE, KG, KP, KR, KZ, LC, LK, LR, LS, LT, LU, LV, MD, MG, MK, MN, MW, MX, NO, NZ, PL, PT, RO, RU, SD, SE, SG, SI, SK, SK (Utility model), TJ, TM, TR, TT, UA, UG, UZ, VN, ARIPO patent (KE, LS, MW, SD, SZ, UG), Eurasian patent (AM, AZ, BY, KG, KZ, MD, RU, TJ, TM), European patent (AT, BE, CH, DE, DK, ES, FI, FR, GB, GR, IE, IT, LU, MC, NL, PT, SE), OAPI patent (BF, BJ, CF, CG, CI, CM, GA, GN, ML, MR, NE, SN, TD, TG).

Published
With international search report.
Before the expiration of the time limit for amending the claims and to be republished in the event of the receipt of amendments.

(54) Title: TRENCHLESS UNDERGROUND BORING SYSTEM WITH BORING TOOL LOCATION

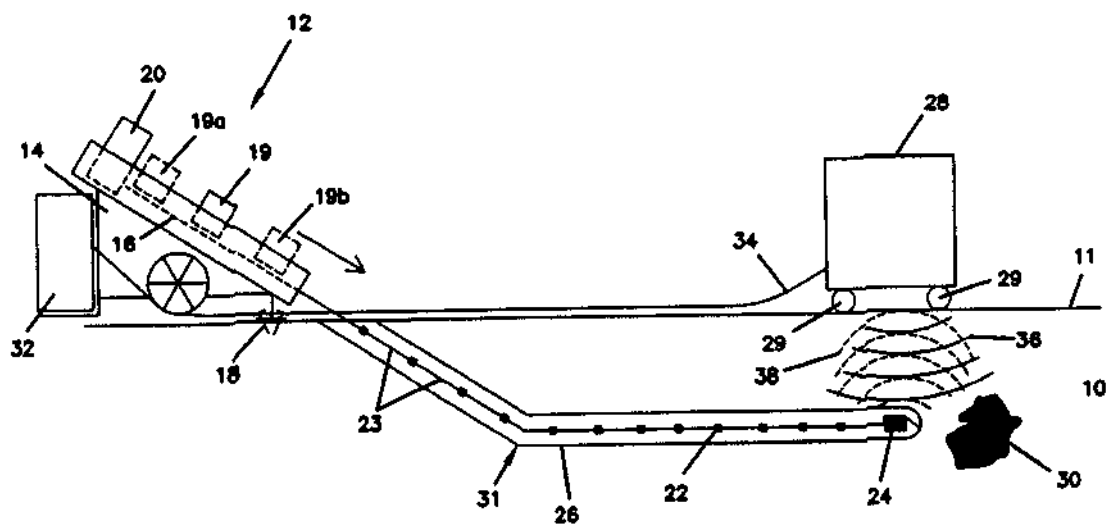

(57) Abstract

An apparatus and method for locating an underground boring tool using a radar-like probe and detection technique. A boring tool is provided with a device which generates a specific signature signal in response to a probe signal transmitted from above the ground. Cooperative operation between the probe signal transmitter at ground level and a signature signal generator disposed within the boring tool provides for the accurate locating of the boring tool, despite the presence of a large background signal. The signature signal produced by the boring tool may be generated either passively or actively, and in a manner which differs from the probe signal in one or more ways, including timing, frequency content, or polarization. A survey of a boring site, made either prior to or during the boring operation, provides data related to the characteristics of the ground medium subjected to the survey and the identification of underground hazards, such as buried utilities.