Introduction

In this laboratory, baseband digital signal concepts are demonstrated. An analog signal is sampled, quantized, and encoded, and pulse code modulation (PCM) is illustrated. Baseband time-division multiplexing (TDM) is also studied. The quality of digital signals is qualitatively evaluated using eye diagrams

A.2 - Sampling, Quantization and Encoding

A.2.1. Experimental Setup for Sampling Theorem

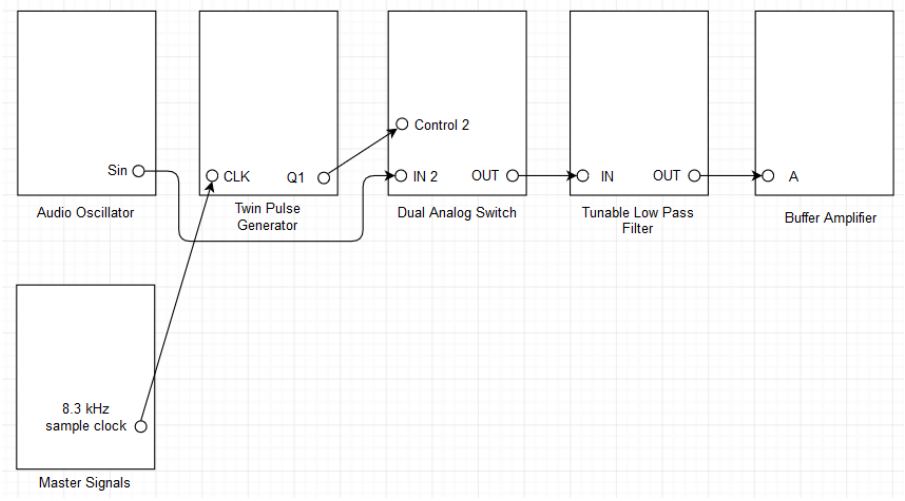

Figure A.2.1: Setup for sampling theorem.

NOTE: Make appropriate connections for Scope Selector and Pico Scope Interface according to the steps given below.

A.2.2. Laboratory Exercise for Sampling Theorem

NOTE: Refer the user manual to learn about the features of Twin Pulse Generator (TPG) and Dual Analog Switch (DAS).

i. Set an audio oscillator to generate 2 kHz sine signal.
ii. Make the setup as shown in Figure A.2.1.
iii. Toggle the on-board switch-mode of the TPG to single and toggle the front panel switch of the TLPF to normal. Turn the knob of the buffer amplifier to minimum, turn both the knobs of the TLPF to minimum and turn the width knob of the TPG to maximum.
iv. Observe that the sampling frequency is 8.3 kHz.
v. View the signals from output of the DAS and output of the audio oscillator.
vi. Take a screenshot of the DAS output and output of the audio oscillator under the scope mode.
vii. Measure frequency of the message signal peak and frequency of the sampled message signal peaks.

viii. Take a screenshot of the DAS and output of the audio oscillator under the spectrum mode.

ix. Switch to view the signals from output of the buffer amplifier and output of the audio oscillator.

x. Adjust both the knobs of the TLPF and the knob of the buffer amplifier to obtain the demodulated message signal with minimum phase shift and equal amplitude.

xi. Take a screenshot of output of the buffer amplifier and output of the audio oscillator under the scope mode.

xii. Increase frequency of the audio oscillator to observe the changes in the demodulated message signal. What do these changes signify?

A.2.3. Experimental Setup for TDM and De Multiplexing

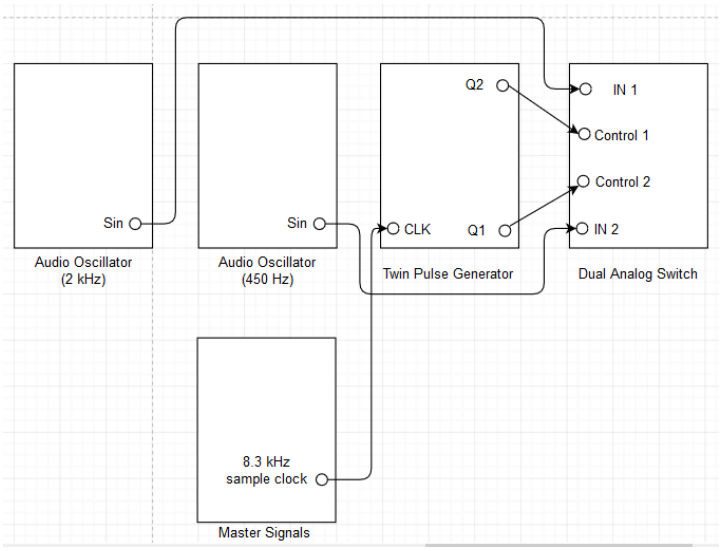

Figure A.2.2.a: Setup for TDM.

NOTE: Above given experimental setup consists of two audio oscillators, i.e., 2 kHz audio oscillator and 450 Hz audio oscillator.

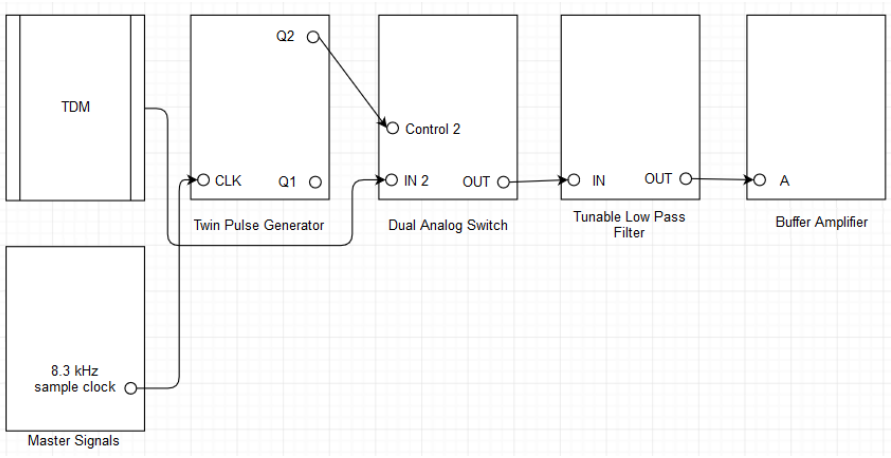

Figure A.2.2.b: Setup for Demultiplexer.

A.2.4. Laboratory Exercise for TDM and Demultiplexing

i. Set an audio oscillator to generate 2 kHz sine signal.

ii. Set another audio oscillator to generate 450 Hz sine signal.

iii. Make the multiplexer setup as shown in Figure A.2.2.a.

iv. Toggle the on-board switch-mode of the TPG to twin. Turn both the knobs of the TPG midway.

v. Observe that 2 kHz message signal and 450 Hz message signal are being sampled at 8.3 kHz.

vi. View the signals from output of the 2 kHz audio oscillator and output of the DAS.

vii. Take a screenshot of output of the 2 kHz audio oscillator and output of the DAS under the scope mode.

viii. Switch to view the signals from output of the 450 Hz audio oscillator and output of the DAS.

ix. Take a screenshot of output of the 450 Hz audio oscillator and output of the DAS under the scope mode.

x. Observe that the TDM signal is a combination of two sampled message signals corresponding to two different message signals.

xi. Retain the multiplexer setup and make the demultiplexer setup as shown in Figure A.2.2.b.

xii. Toggle the on-board switch-mode of the TPG at the de-multiplexer to twin and toggle the front panel switch of the TLPF to normal. Turn both the knobs of the TPG at the de multiplexer to minimum, turn the knob of the buffer amplifier to minimum and turn both the knobs of the TLPF to minimum.

xiii. Observe that Q2 of the TPG at the demultiplexer is controlling the DAS at the demultiplexer.

xiv. View the signals from output of the DAS at the multiplexer and Q2 of the TPG at the demultiplexer.

xv. Adjust both the knobs of the TPG at the demultiplexer to make the stream of pulse coincide exactly over the samples of the 2 kHz message signal present in the TDM signal.

xvi. Observe that step **xv** decides the switching time to de multiplex the samples of the 2 kHz message signal.

xvii. Take a screenshot of output of the DAS at the multiplexer and Q2 of the TPG at the de multiplexer under the scope mode.

xviii. Switch to view the signals from output of the DAS at the multiplexer and output of the DAS at the demultiplexer.

xix. Take a screenshot of output of the DAS at the multiplexer and output of the DAS at the de multiplexer under the scope mode.

xx. Switch to view the signals from output of the buffer amplifier and output of the 2 kHz audio oscillator.

xxi. Adjust both the knobs of the TLPF and the knob of the buffer amplifier to obtain the demodulated message signal with minimum phase shift and equal amplitude.

xxii. Take a screenshot of output of the buffer amplifier and output of the 2 kHz audio oscillator under the scope mode.

xxiii. Unplug the signal from Q2 of the TPG at the de multiplexer to control 2 of the DAS at the de multiplexer. Plug the signal from Q1 of the TPG at the de multiplexer to control 2 of the DAS at the de multiplexer. Repeat step **xx** through step **xxii**, accordingly.

xxiv. Provide a screenshot of the spectrum of the TDM signal. Discuss its bandwidth and compare it to the expected bandwidth.

A.2.5. Experimental Setup for PCM

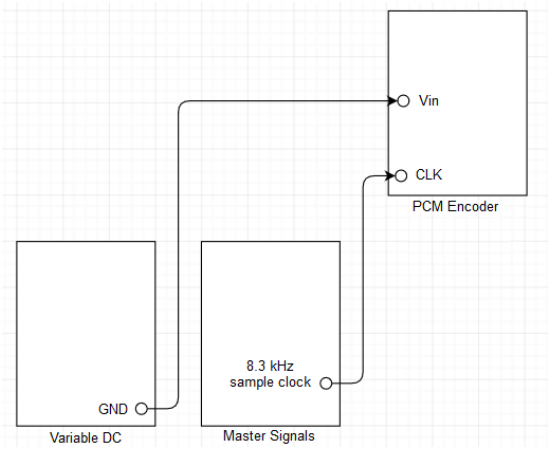

Figure A.2.3: Setup for PCM.

A.2.6. Laboratory Exercise for PCM

NOTE: Refer the user manual to learn about the features of PCM encoder.

i. Make the modulator setup as shown in Figure A.2.3.

ii. Toggle the left pin down and the right pin up of the on-board switch-SW2 of the PCM encoder and toggle the front panel switch of the PCM encoder to 4 bit linear.

iii. View the signals from CLK of the PCM encoder and FS of the PCM encoder. How many clock periods are present in a PCM frame?

iv. What does the number of clock periods present in a PCM frame signify?

v. Take a screenshot of CLK of the PCM encoder and FS of the PCM encoder under the scope mode.

vi. Switch to view the signals from PCM DATA of the PCM encoder and FS of the PCM encoder.

vii. Observe that the bit 0 has alternating 0s and 1s for PCM frame synchronization.

viii. Take a screenshot of PCM DATA of the PCM encoder and FS of the PCM encoder under the scope mode.

ix. Unplug the signal from GND of the variable DC to input of the PCM encoder. Plug the signal from DC of the variable DC to input of the PCM encoder.

x. Turn the knob of the variable DC to minimum, i.e., maximum negative DC voltage.

xi. Slowly increase the knob of the variable DC from minimum to maximum to observe the changing binary words. Tabulate the binary words and the corresponding DC voltages to calculate the quantization intervals of the PCM encoder. Do that for at least 4 consecutive bit arrangements.

xii. For the maximum positive DC voltage, take a screenshot of PCM DATA of the PCM encoder and FS of the PCM encoder under the scope mode.

xiii. Toggle the front panel switch of the PCM encoder to 7 bit linear. Turn the knob of the variable DC to minimum.

xiv. Slowly increase the knob of the variable DC from minimum to maximum to observe the changing binary words.

xv. For the maximum positive DC voltage, take a screenshot of PCM DATA of the PCM encoder and FS of the PCM encoder under the scope mode.

xvi. Observe the difference between binary word with 4 bit linear scheme and binary word with 7 bit linear scheme.

A.2.7. Laboratory Exercise for PCM Demodulation

NOTE: Refer the user manual to learn about the features of PCM decoder.

i. Retain the modulator setup and insert a PCM decoder next to the PCM encoder.

ii. Plug the signals from PCM DATA, CLK and FS of the PCM encoder to PCM DATA, CLK and FS of the PCM decoder, respectively.

iii. Toggle the front panel switch of the PCM decoder to EXT FS, toggle the front panel switch of the PCM encoder to 4 bit linear and toggle the front panel

switch of the PCM decoder to 4 bit linear. Turn the knob of the variable DC to minimum.

iv. View the signals from output of the PCM decoder and input of the PCM encoder.

v. Slowly increase the knob of the variable DC from minimum to maximum to observe the changing voltage level.

vi. Toggle the front panel switch of the PCM encoder to 7 bit linear and toggle the front panel switch of the PCM decoder to 7 bit linear. Turn the knob of the variable DC to minimum.

vii. Slowly increase the knob of the variable DC from minimum to maximum to observe the changing voltage level.

viii. Observe the difference between decoded signal with 4 bit linear scheme and decoded signal with 7 bit linear scheme.

ix. Unplug the signal from DC of the variable DC to input of the PCM encoder. Plug the signal from SYNC of the PCM encoder via buffer amplifier to input of the PCM encoder.

x. Toggle the front panel switch of the PCM encoder to 4 bit linear and toggle the front panel switch of the PCM decoder to 4 bit linear.

xi. Adjust the knob of the buffer amplifier to obtain a decoded message signal with 2 V peak to peak amplitude.

xii. Take a screenshot of output of the PCM decoder and input of the PCM encoder under the scope mode.

xiii. Toggle the front panel switch of the PCM encoder to 7 bit linear and toggle the front panel switch of the PCM decoder to 7 bit linear.

xiv. Take a screenshot of output of the PCM decoder and input of the PCM encoder under the scope mode.

xv. Observe the difference between decoded message signal with 4 bit linear scheme and decoded message signal with 7 bit linear scheme. What does it signify?

xvi. Use an additional TIMS modules (Tunable Low Pass filter & Phase Shifter) to obtain the demodulated message signal with minimum phase shift and equal amplitude. For 4 bit linear scheme and 7 bit linear scheme, take a screenshot of input of the PCM encoder and the demodulated message signal under the scope mode.

A.2.8. Experimental Setup for Eye Diagram

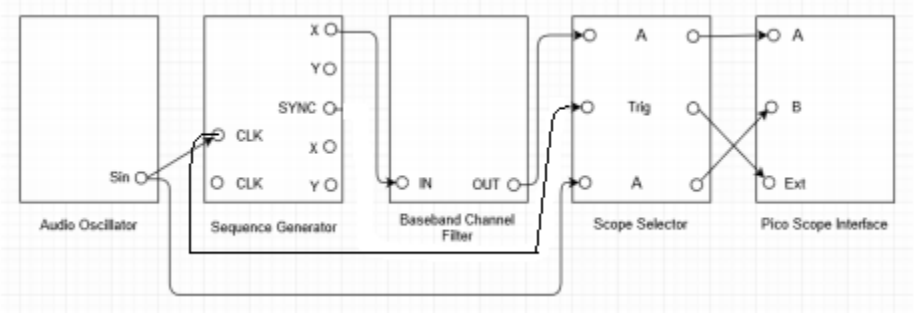

Figure A.2.4: Setup for eye diagram.

A.2.9. Laboratory Exercise for Eye Diagram

NOTE: Refer the user manual to learn about the features of sequence generator.

- **i.** Set an audio oscillator to generate 1 kHz sine signal.
- **ii.** Make the setup as shown in Figure A.2.4.
- **iii.** Toggle both the pins of the on-board switch-SW2 of the sequence generator down.
- **iv.** Under the persistence mode, for channel A, change the input range to $\pm$ 5 V and select the maximum number of bits as 8. Change the collection time to 500 μs/div and change the trigger options to auto and ext.
- **v.** Observe that the eye diagrams have wide eye openings. What do they signify?
- **vi.** To refresh the eye diagrams, click on run and stop options under the persistence mode.
- **vii.** Take a screenshot of output of the baseband channel filters under the persistence mode.
- **viii.** Improve eye diagrams to obtain optimum eye openings.
- **ix.** Take a screenshot of output of the baseband channel filters under the persistence mode.
- **x.** Measure the maximum data rate of channel 2 which corresponds to the audio oscillator frequency.
- **xi.** Provide a screenshot of the spectrum at the output of the baseband channel output filter. Discuss its bandwidth and compare it to the expected bandwidth.